Invendis™
Invent, Discover.

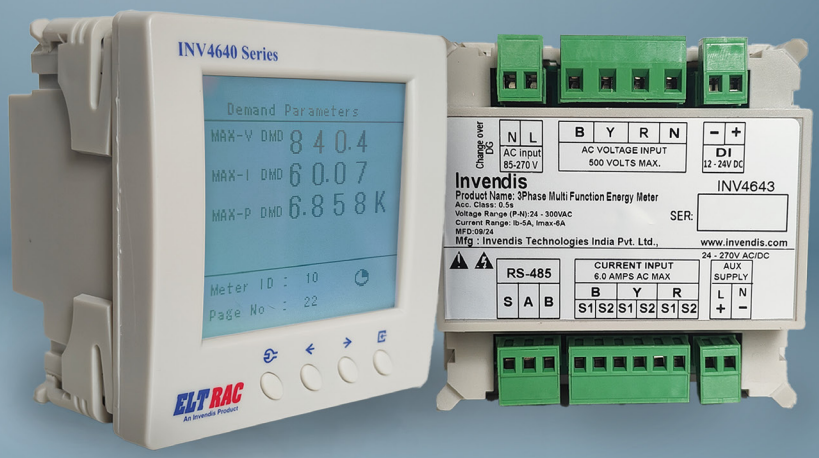

ADVANCED DIGITAL POWER & ENERGY

MULTI-FUNCTION METERS

Our INV 4640 Series Multi-Function Meters (MFM) are the simple, robust solution for advanced power & energy monitoring. This meter provides Co2 live monitoring feature to know the Carbon Emission from any kind of sources. These meters are engineered with easy integration to suit any kind of projects environment and a wide range of Measuring parameters to meet your energy efficiency monitoring needs.

- **CO2 MONITORING**
- **TOD/TOU**
- **DUAL SOURCE**
- **REAL TIME CLOCK**
- **INDIVIDUAL HARMONICS & THD**

	IN4641	IN4642	IN4643	IN4644
Active Import/ Export energy		●	●	●
Apparent Import / Export energy		●	●	●
Active and Reactive Quadrant wise energy			●	●
Cumulative Max Demand – selectable kW or kVA	●	●	●	●
Current demand			●	●
Voltage Demand			●	●
Dual Source	●	●	●	●
Max Min values				●
THD – Volt, Amp and Power		●	●	●
Individual Harmonics V, I				●
Neutral Current			●	●
TOU – 8 slots			●	●
TOD – 6 slots		●	●	●
RTC		●	●	●
*Accuracy Class	0.5	0.5	0.5/0.2	0.5/0.2
Display	LED/LCD	LED/LCD	LCD	LCD
Diagnostic LED	●	●	●	●
Co2 Monitoring	●	●	●	●

Note: * Ordering options at additional cost - Ethernet -Modbus TCP/IP, Relay output – 1 relay, Pulse output – 2 outputs, Digital I/O -2
Type test carried at “Electrical Research and Development Association” Vadodara India. Reports are available on request.

Product Description

- Product cover frame 96* 96mm, the display window 80*51mm, Dimensions: 100*100*94mm, hole: 91*91mm
- Product Standard accessories: ABS panels, transparent panels, four buttons, shell, four mounting brackets

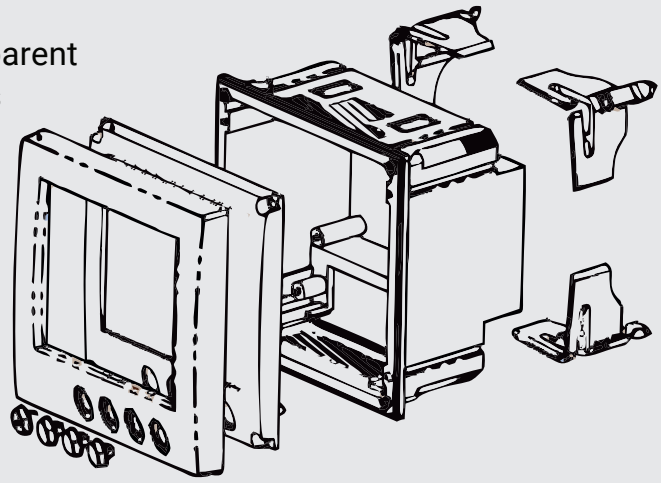

Material

- Panel: fire-retardant ABS
- The transparent inner frame: PC
- Housing: Flame retardant ABS
- Mount: PC
- Key: Flame retardant ABS

FEATURES

- Carbon Emission Monitoring.
- High Accuracy class 0.2s,0.5.
- RS485 Modbus communication.
- Voltage & Current THD, Individual Harmonics up to 31st.
- Load ON & Power ON hours.
- Favourite page configuration.
- Calculated Neutral current measurement.
- True RMS measurement.
- Diagnostic LED for self-health check.
- Addon modules for Analog, Pulse, Relay Output.
- On site firmware upgrade through communication port.
- Maximum Demand recording.
- Password protection

TECHNICAL PARTICULARS	OFFERED SPECIFICATION
Meter Type	Three phase Multifunction panel mountable meter
Electrical Parameters	
Voltage	Phase wise – LL , LN, Max and min values
Current	L1, L2, L3 – Maximum and minimum values and Neutral current
Line Frequency	Hz
Current rating	CT Primary programmable, CTS 1A / 5A
Active power	Total kW & Phase wise
Apparent Power	Total kVA & Phase wise
Reactive power	Total kVAR
Energy	Total kWh, Phase wise
Apparent Energy	Total kVAH. Phase wise
Reactive Energy	Total kVARH Quadrant wise
Apparent Import / Export energy	KVAH
Load Hour	Hr : min
Phase angle	
Control parameters	
Aux. Supply	85 – 270V AC/DC
Voltage Range	60V to 415V (Line to Line)
Current	CT primary programmable. Secondary 5A
PF Range	0.5 lag to unity to 0.5 lead
Resolution	0.1 kW /kVA

RTC	Available
Memory	Data storage
Power Quality Parameters	THD (V & I)
Burden	0.1VA per Voltage/ Current input, 2VA for Aux input
Power Consumption	< 2 Watt
Reverse Protection	Aux supply reverse polarity protection
Operating Temperature	0 to 50°C
Storage Temperature	0 to 75°C
Relative Humidity	Up to 95% non-Condensing
Weight	300 g
Dimensions	96mmX96mm (Bezel) X52mm
Mounting	Panel mountable (Slide and Lock Clamp)
Communication port	Isolated RS485: 3 wire communication port with MODBUS protocol and Inbuilt TVS protection
Baud rate	Default with 9600
Parity	None /Even Selectable

118,000+ Telecom Towers

700+ Solar Sites

15+ Global MNO/Tower CO

26+ Countries

500,000+ Connected Assets

20,000+ Enterprise Users

DIN EN ISO 9001:2015

Invendis
Invent, Discover.

sales@invendis.com

www.invendis.com

No. 230, 1st Cross, 38th Main, BOOHBCS Layout,
BTM 2nd Stage, Bangalore – 560 068

SCAN FOR
MORE DETAILS

INVENDIS/IMS/MKT/F/10, Rev 01